SRE Stripper Head Monitor - Wiring

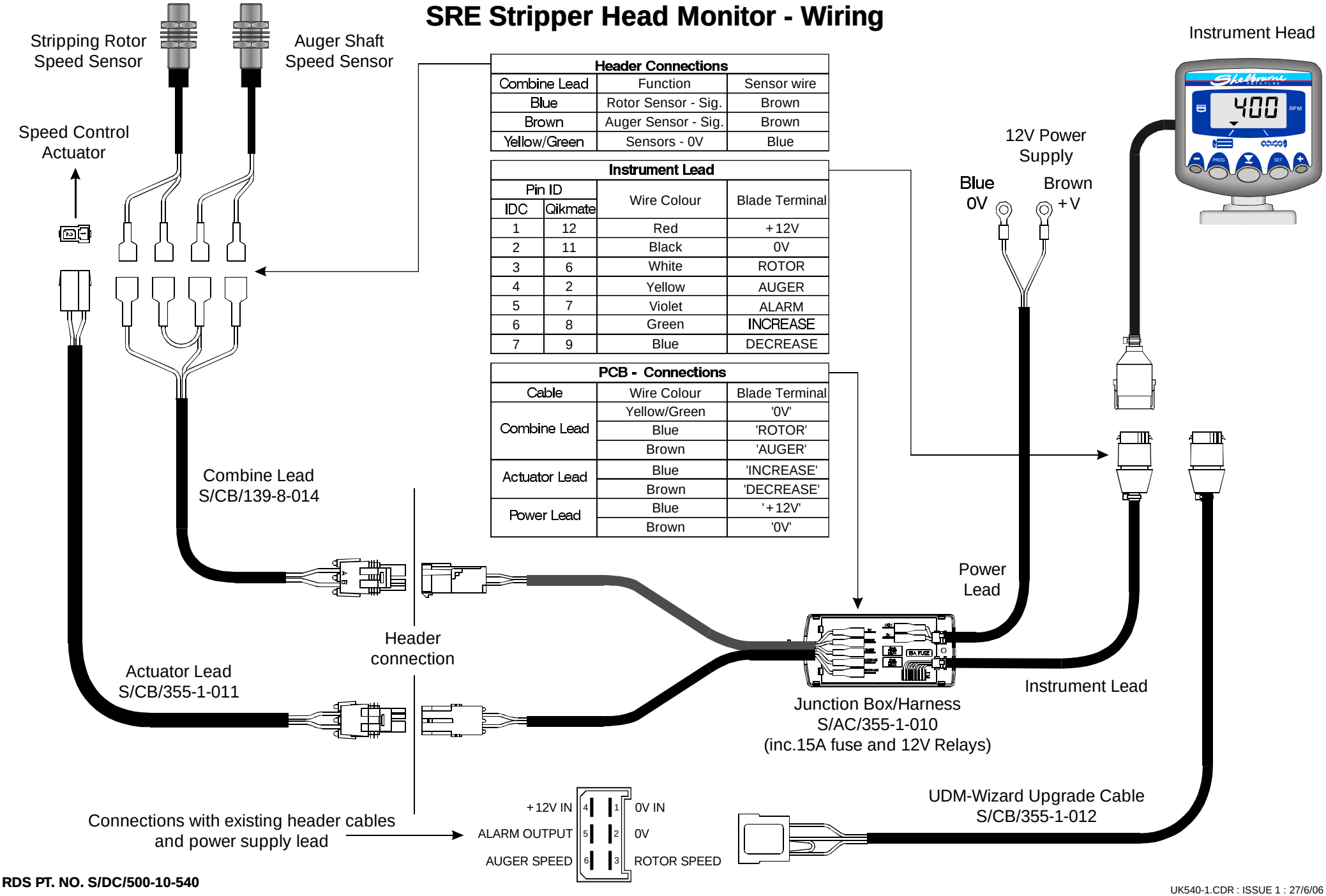

Header Connections

Combine Lead	Function	Sensor wire
Blue	Rotor Sensor - Sig.	Brown
Brown	Auger Sensor - Sig.	Brown
Yellow/Green	Sensors - 0V	Blue

Instrument Lead

Pin ID		Wire Colour	Blade Terminal
IDC	Qikmate		
1	12	Red	+12V
2	11	Black	0V
3	6	White	ROTOR
4	2	Yellow	AUGER
5	7	Violet	ALARM
6	8	Green	INCREASE
7	9	Blue	DECREASE

PCB - Connections

Cable	Wire Colour	Blade Terminal
Combine Lead	Yellow/Green	'0V'
	Blue	'ROTOR'
	Brown	'AUGER'
Actuator Lead	Blue	'INCREASE'
	Brown	'DECREASE'
Power Lead	Blue	'+12V'
	Brown	'0V'

RDS PT. NO. S/DC/500-10-540

UK540-1.CDR : ISSUE 1 : 27/6/06